

Standoff elevation from surface 3.5mm
Suggested product: PEM SO BN 20521 300122063 SO-M3-5Z

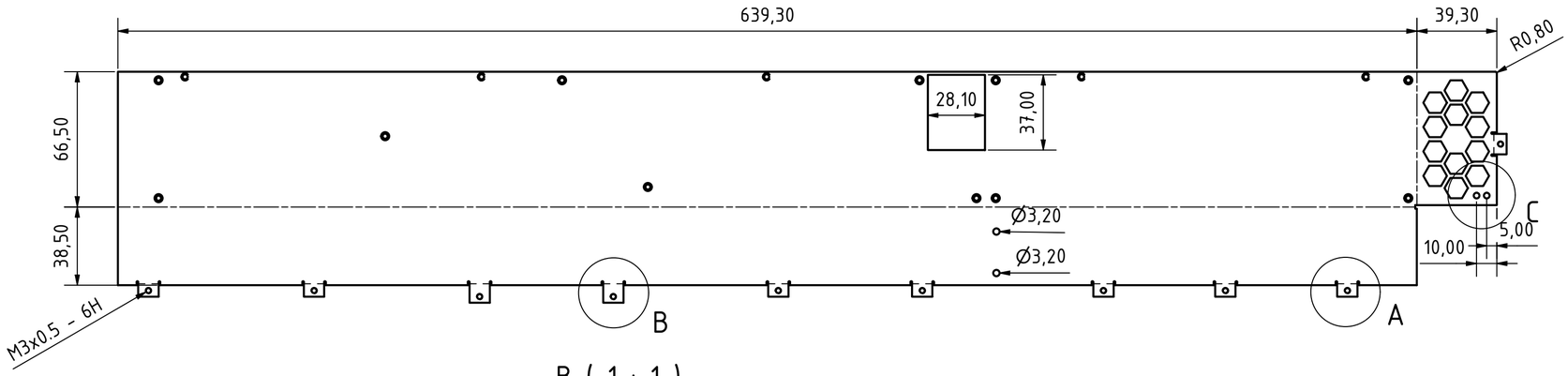

C (1 : 1)

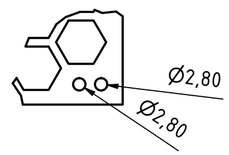

B (1 : 1)

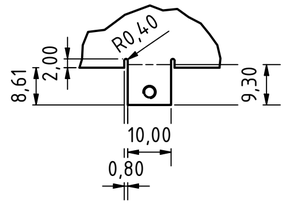

A (1 : 1)

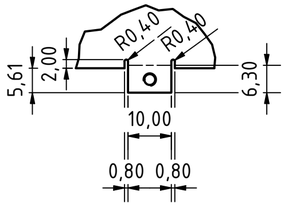

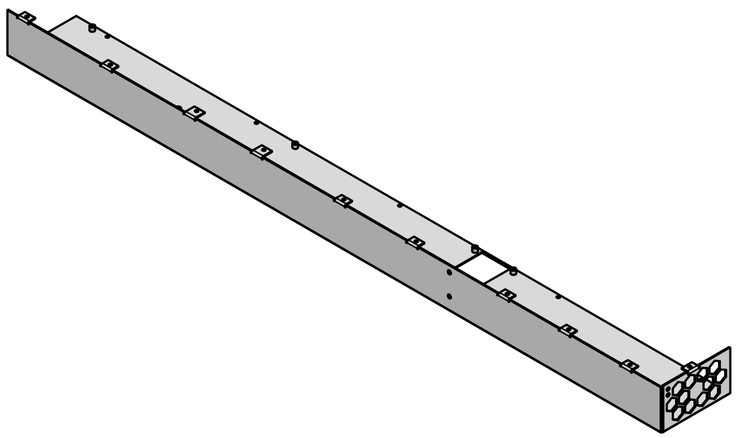

					Datum	Name
				Gezeich	14.11.2025	Wernegger
				Kontroll		
				Norm		
Status	Änderungen	Datum	Name			

Material: powder-coated steel

MP100001549 chassis

1

A2